Cable Trays - System of Side Height H80

Integrated Perforated Cable Trays - Return Flanges

Geçmeli Tip Kablo Kanalı - Интегрированные Перфорированные лотки

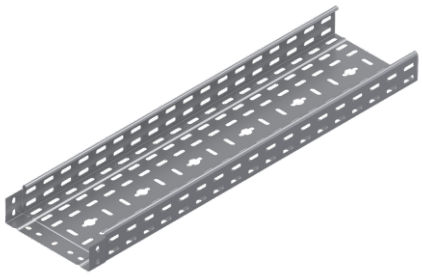

Important!
Joining cable tray sections together only use
Screw Sets CFS M6 or CFS M8

Pre - Galvanised

GPK ... H80			0.6mm	
CODE	Width a mm	Length L mm	kg 1 mt	pcs
GPK 807 06 PG	75	3000	0.96	2
GPK 810 06 PG	100	3000	1.05	2
GPK 812 06 PG	125	3000	1.14	2
GPK 815 06 PG	150	3000	1.24	2
GPK 820 06 PG	200	3000	1.43	2
			0.7mm	
CODE	Width a mm	Length L mm	kg 1 mt	pcs
GPK 807 07 PG	75	3000	1.12	2
GPK 810 07 PG	100	3000	1.22	2
GPK 812 07 PG	125	3000	1.34	2
GPK 815 07 PG	150	3000	1.45	2
GPK 820 07 PG	200	3000	1.66	2

GPK ... H80			0.8mm	
CODE	Width a mm	Length L mm	kg 1 mt	pcs
GPK 807 08 PG	75	3000	1.27	2
GPK 810 08 PG	100	3000	1.39	2
GPK 812 08 PG	125	3000	1.52	2
GPK 815 08 PG	150	3000	1.65	2
GPK 820 08 PG	200	3000	1.90	2
GPK 822 08 PG	225	3000	2.02	2
GPK 825 08 PG	250	3000	2.15	2
GPK 830 08 PG	300	3000	2.40	2

GPK ... H80			1.0mm	
CODE	Width a mm	Length L mm	kg 1 mt	pcs
GPK 807 10 PG	75	3000	1.58	2
GPK 810 10 PG	100	3000	1.74	2
GPK 812 10 PG	125	3000	1.90	2
GPK 815 10 PG	150	3000	2.05	2
GPK 820 10 PG	200	3000	2.37	2
GPK 822 10 PG	225	3000	2,52	2
GPK 825 10 PG	250	3000	2,68	2
GPK 830 10 PG	300	3000	2,99	2
GPK 840 10 PG	400	3000	3,62	2
			1.2mm	
GPK 807 12 PG	75	3000	1.90	2
GPK 810 12 PG	100	3000	2.08	2
GPK 812 12 PG	125	3000	2.27	2
GPK 815 12 PG	150	3000	2.46	2
GPK 820 12 PG	200	3000	2.84	2
GPK 822 12 PG	225	3000	3.02	2
GPK 825 12 PG	250	3000	3.22	2
GPK 830 12 PG	300	3000	3.59	2
GPK 840 12 PG	400	3000	4.34	2
GPK 845 12 PG	450	3000	4.72	2
GPK 850 12 PG	500	3000	5,10	2
GPK 860 12 PG	600	3000	5,85	2

GPK H80

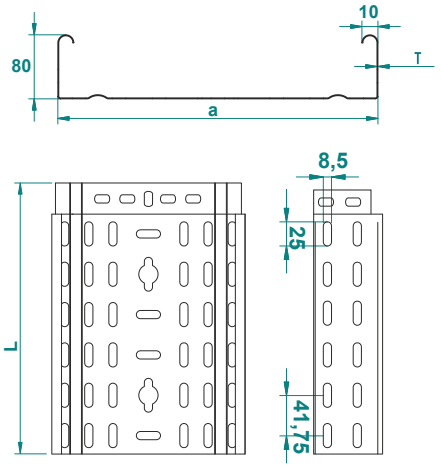

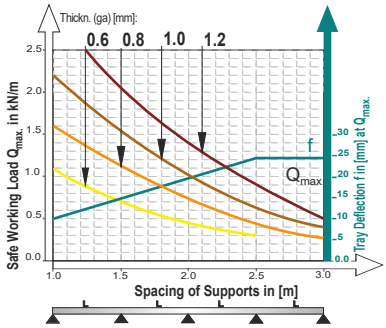

This diagram comply with IEC 61537 with connection to 1/5 of the span and the end span =0,8x the span
Q = max. admissible load (kg/m)
L = support distance (m)
f = Deflection (mm) / Max. deflection = L/100
Safetly co-efficient = 1.5

Width	Usable Cross-Section
50	38 cm²
100	78 cm²
150	118 cm²
200	158 cm²
300	238 cm²
400	318 cm²
500	398 cm²
600	478 cm²

Mounting Example

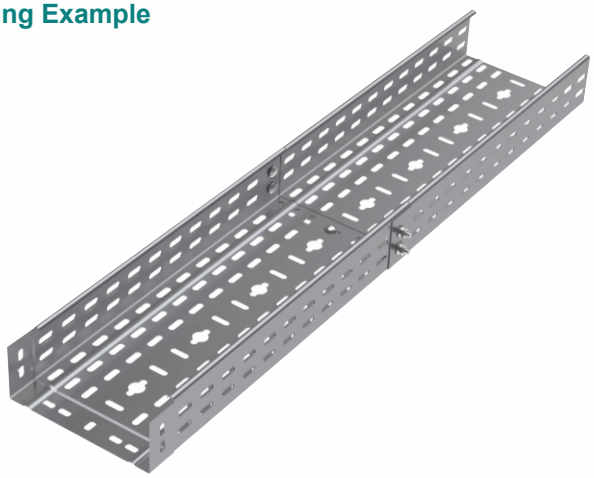

Recommended Quantities of Bolt and Nut For Integrated Cable Tray Connections

Width Of Cable Tray W \ H	40	50	60	75	80	85	100
50	2 Sets	2 Sets	2 Sets	–	–	–	–
100	3 Sets	3 Sets	3 Sets	5 Sets	5 Sets	5 Sets	5 Sets
150	3 Sets	3 Sets	3 Sets	5 Sets	5 Sets	5 Sets	5 Sets
200	3 Sets	3 Sets	3 Sets	5 Sets	5 Sets	5 Sets	5 Sets
250	3 Sets	3 Sets	3 Sets	5 Sets	5 Sets	5 Sets	5 Sets
300	3 Sets	3 Sets	3 Sets	5 Sets	5 Sets	5 Sets	5 Sets
400	5 Sets	5 Sets	5 Sets	7 Sets	7 Sets	7 Sets	7 Sets
500	5 Sets	5 Sets	5 Sets	7 Sets	7 Sets	7 Sets	7 Sets
600	5 Sets	5 Sets	5 Sets	7 Sets	7 Sets	7 Sets	7 Sets

Recommended Quantities of Bolt and Nut For Integrated Cable Tray Connections

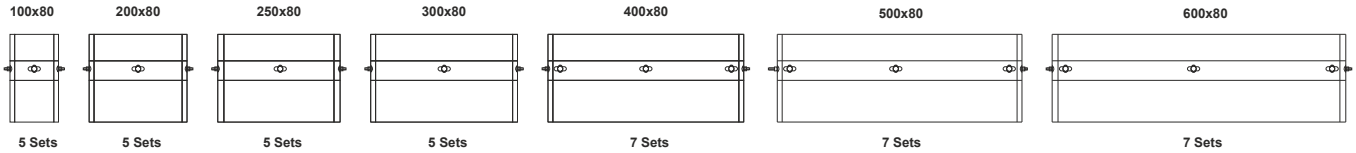

Cable Trays - System of Side Height H80

MADE IN TURKEY

Integrated Perforated Cable Trays - Return Flanges

Geçmeli Tip Kablo Kanalı - Интегрированные Перфорированные лотки

Important!
Joining cable tray sections together only use
Screw Sets CFS M6 or CFS M8

Pre - Galvanised

GDK ... H80 — 0.6mm

CODE	Width a mm	Length L mm	kg 1 mt	pcs
GDK 807 06 PG	75	3000	0.96	2
GDK 810 06 PG	100	3000	1.05	2
GDK 812 06 PG	125	3000	1.14	2
GDK 815 06 PG	150	3000	1.24	2
GDK 820 06 PG	200	3000	1.43	2

0.7mm

CODE	Width a mm	Length L mm	kg 1 mt	pcs
GDK 807 07 PG	75	3000	1.12	2
GDK 810 07 PG	100	3000	1.22	2
GDK 812 07 PG	125	3000	1.34	2
GDK 815 07 PG	150	3000	1.45	2
GDK 820 07 PG	200	3000	1.66	2

0.8mm

CODE	Width a mm	Length L mm	kg 1 mt	pcs
GDK 807 08 PG	75	3000	1.27	2
GDK 810 08 PG	100	3000	1.39	2
GDK 812 08 PG	125	3000	1.52	2
GDK 815 08 PG	150	3000	1.65	2
GDK 820 08 PG	200	3000	1.90	2
GDK 822 08 PG	225	3000	2.02	2
GDK 825 08 PG	250	3000	2.15	2
GDK 830 08 PG	300	3000	2.40	2

GDK ... H80 — 1.0mm

CODE	Width a mm	Length L mm	kg 1 mt	pcs
GDK 807 10 PG	75	3000	1.58	2
GDK 810 10 PG	100	3000	1.74	2
GDK 812 10 PG	125	3000	1.90	2
GDK 815 10 PG	150	3000	2.05	2
GDK 820 10 PG	200	3000	2.37	2
GDK 822 10 PG	225	3000	2,52	2
GDK 825 10 PG	250	3000	2,68	2
GDK 830 10 PG	300	3000	2,99	2
GDK 840 10 PG	400	3000	3,62	2

1.2mm

CODE	Width a mm	Length L mm	kg 1 mt	pcs
GDK 807 12 PG	75	3000	1.90	2
GDK 810 12 PG	100	3000	2.08	2
GDK 812 12 PG	125	3000	2.27	2
GDK 815 12 PG	150	3000	2.46	2
GDK 820 12 PG	200	3000	2.84	2
GDK 822 12 PG	225	3000	3.02	2
GDK 825 12 PG	250	3000	3.22	2
GDK 830 12 PG	300	3000	3.59	2
GDK 840 12 PG	400	3000	4.34	2
GDK 845 12 PG	450	3000	4.72	2
GDK 850 12 PG	500	3000	5,10	2
GDK 860 12 PG	600	3000	5,85	2

GDK H80

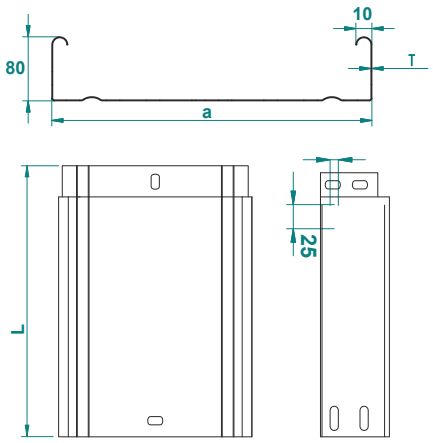

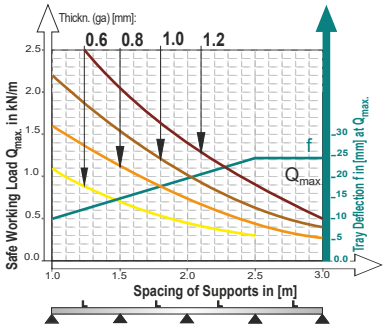

This diagram comply with IEC 61537 with connection to 1/5 of the span and the end span =0,8x the span
Q = max. admissible load (kg/m)
L = support distance (m)
f = Deflection (mm) / Max. deflection = L/100
Safetly co-efficient = 1.5

Width	Usable Cross-Section
50	38 cm²
100	78 cm²
150	118 cm²
200	158 cm²
300	238 cm²
400	318 cm²
500	398 cm²
600	478 cm²

Mounting Example

Recommended Quantities of Bolt and Nut For Integrated Cable Tray Connections

Width Of Cable Tray W \ H	40	50	60	75	80	85	100
50	2 Sets	2 Sets	2 Sets	–	–	–	–
100	3 Sets	3 Sets	3 Sets	5 Sets	5 Sets	5 Sets	5 Sets
150	3 Sets	3 Sets	3 Sets	5 Sets	5 Sets	5 Sets	5 Sets
200	3 Sets	3 Sets	3 Sets	5 Sets	5 Sets	5 Sets	5 Sets
250	3 Sets	3 Sets	3 Sets	5 Sets	5 Sets	5 Sets	5 Sets
300	3 Sets	3 Sets	3 Sets	5 Sets	5 Sets	5 Sets	5 Sets
400	5 Sets	5 Sets	5 Sets	7 Sets	7 Sets	7 Sets	7 Sets
500	5 Sets	5 Sets	5 Sets	7 Sets	7 Sets	7 Sets	7 Sets
600	5 Sets	5 Sets	5 Sets	7 Sets	7 Sets	7 Sets	7 Sets

Recommended Quantities of Bolt and Nut For Integrated Cable Tray Connections

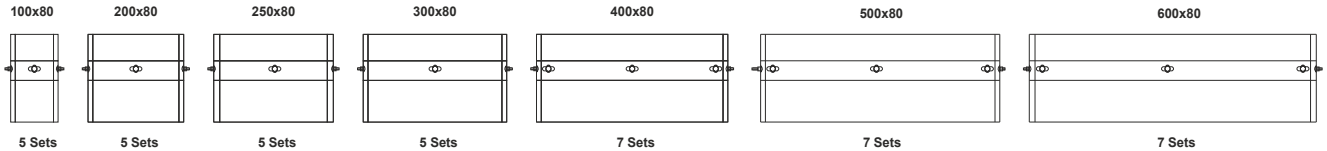

Cable Trays - System of Side Height H80

Perforated Cable Trays - Return Flanges

Ağır Hizmet Kablo Kanalı - Перфорированные лотки

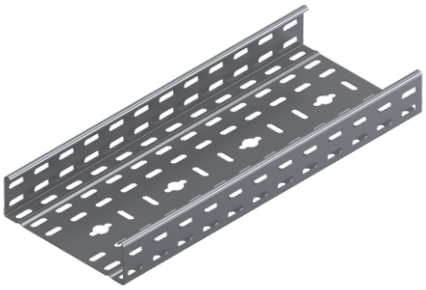

Important!
Joining cable tray sections together only through the use of couplers 2 pcs for 1 Lenght
To install cable tray - straight use Screw Sets CFS M6 or CFS M8

Pre - Galvanised

APK ... H80			0.6mm	
CODE	Width a mm	Length L mm	kg 1 mt	pcs
APK 807 06 PG	75	3000	0.96	2
APK 810 06 PG	100	3000	1.05	2
APK 812 06 PG	125	3000	1.14	2
APK 815 06 PG	150	3000	1.24	2
APK 820 06 PG	200	3000	1.43	2
			0.8mm	
APK 807 08 PG	75	3000	1.27	2
APK 810 08 PG	100	3000	1.39	2
APK 812 08 PG	125	3000	1.52	2
APK 815 08 PG	150	3000	1.65	2
APK 820 08 PG	200	3000	1.90	2
APK 822 08 PG	225	3000	2.02	2
APK 825 08 PG	250	3000	2.15	2
APK 830 08 PG	300	3000	2.40	2
			1.0mm	
APK 807 10 PG	75	3000	1.58	2
APK 810 10 PG	100	3000	1.74	2
APK 812 10 PG	125	3000	1.90	2
APK 815 10 PG	150	3000	2.05	2
APK 820 10 PG	200	3000	2.37	2
APK 822 10 PG	225	3000	2.52	2
APK 825 10 PG	250	3000	2.68	2
APK 830 10 PG	300	3000	2.99	2
APK 840 10 PG	400	3000	3.62	2

APK ... H80			1.2mm	
CODE	Width a mm	Length L mm	kg 1 mt	pcs
APK 807 12 PG	75	3000	1.90	2
APK 810 12 PG	100	3000	2.08	2
APK 812 12 PG	125	3000	2.27	2
APK 815 12 PG	150	3000	2.46	2
APK 820 12 PG	200	3000	2.84	2
APK 822 12 PG	225	3000	3.02	2
APK 825 12 PG	250	3000	3.22	2
APK 830 12 PG	300	3000	3.59	2
APK 840 12 PG	400	3000	4.34	2
APK 845 12 PG	450	3000	4.72	2
APK 850 12 PG	500	3000	5.10	2
APK 860 12 PG	600	3000	5.85	2
			1.5mm	
APK 807 15 PG	75	3000	2.35	2
APK 810 15 PG	100	3000	2.58	2
APK 812 15 PG	125	3000	2.82	2
APK 815 15 PG	150	3000	3.06	2
APK 820 15 PG	200	3000	3.53	2
APK 822 15 PG	225	3000	3.76	2
APK 825 15 PG	250	3000	4.00	2
APK 830 15 PG	300	3000	4.47	2
APK 840 15 PG	400	3000	5.41	2
APK 845 15 PG	450	3000	5.88	2
APK 850 15 PG	500	3000	6.35	2
APK 860 15 PG	600	3000	7.30	2

Straight Connector (Coupler)

Birleştirme Elemanı - Прямой соединитель

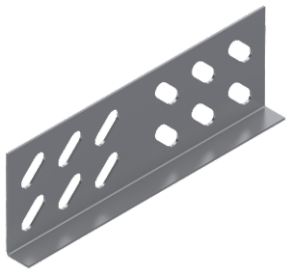

To Install one lenght ;use 2 pieces of KBE connector 8 sets of CFS bolts and nuts. (M6 or M8)

Pre - Galvanised

KBE 2 ... H80		1.2mm	
CODE	Length L mm	kg 1 pc	pcs
KBE 280 12 PG	175	0.12	100

KBE 2 ... H80		1.5mm	
CODE	Length L mm	kg 1 pc	pcs
KBE 280 15 PG	175	0.15	100

Electro - Galvanized

CFS M6			M6	
CODE	Size mm	Length L mm	kg 1Set	pcs
CFS M6 EG	M6	15	0,008	500

CFS M8			M8	
CODE	Size mm	Length L mm	kg 1Set	pcs
CFS M8 EG	M8	15	0,014	500

APK H80

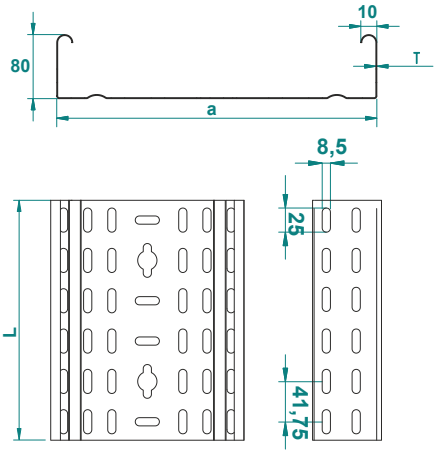

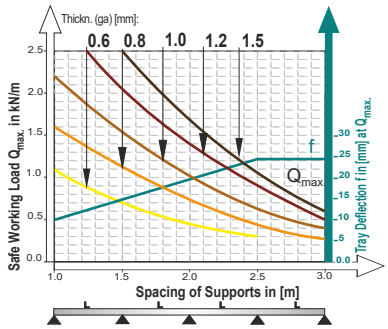

This diagram comply with IEC 61537 with connection to 1/5 of the span and the end span =0,8x the span
Q = max. admissible load (kg/m)
L = support distance (m)
f = Deflection (mm) / Max. deflection = L/100
Safetly co-efficient = 1.5

Width	Usable Cross-Section
50	38 cm²
100	78 cm²
150	118 cm²
200	158 cm²
300	238 cm²
400	318 cm²
500	398 cm²
600	478 cm²

KBE 2

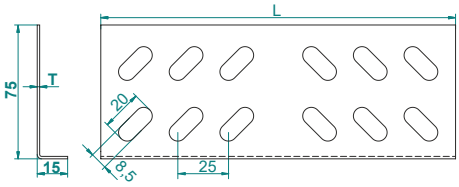

M6x15 Round head squire neck bolt & M6 Flanged nut

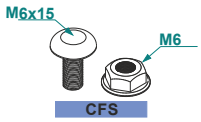

APPLICATIONS
Cable routing

MATERIAL
Steel, strip-galv. acc. to the Sendzimir method to TS-EN 10346:2011 (PG)

Available finishes:
HDG-steel, hot-dip galv. to TS-EN ISO 1461:2011 (HDG)
SS- stainless steel AISI 304L and AISI 316L (SS)
EP- powder coating in a full range of colours (RAL)

Thickn. (ga) [mm]: 0.6 0.8 1.0 1.2 1.5

Cable Trays - System of Side Height H80

Non Perforated Cable Trays - Return Flanges

Ağır Hizmet Deliksiz Kablo Kanalı - Сплошные лотки

Important!
Joining cable tray sections together only through the use of couplers 2 pcs for 1 Lenght
To install cable tray - straight use Screw Sets CFS M6 or CFS M8

Pre - Galvanised

ADK ... H80			0.6mm	
CODE	Width a mm	Length L mm	kg 1 pc	pcs
ADK 807 06 PG	75	3000	1.20	2
ADK 810 06 PG	100	3000	1.31	2
ADK 812 06 PG	125	3000	1.43	2
ADK 815 06 PG	150	3000	1.55	2
ADK 820 06 PG	200	3000	1.79	2
			0.8mm	
ADK 807 08 PG	75	3000	1.59	2
ADK 810 08 PG	100	3000	1.74	2
ADK 812 08 PG	125	3000	1.90	2
ADK 815 08 PG	150	3000	2.06	2
ADK 820 08 PG	200	3000	2.37	2
ADK 822 08 PG	225	3000	2.53	2
ADK 825 08 PG	250	3000	2.69	2
ADK 830 08 PG	300	3000	3.00	2
			1.0mm	
ADK 807 10 PG	75	3000	1.98	2
ADK 810 10 PG	100	3000	2.17	2
ADK 812 10 PG	125	3000	2.37	2
ADK 815 10 PG	150	3000	2.56	2
ADK 820 10 PG	200	3000	2.96	2
ADK 822 10 PG	225	3000	3.15	2
ADK 825 10 PG	250	3000	3.35	2
ADK 830 10 PG	300	3000	3.74	2
ADK 840 10 PG	400	3000	4.53	2

ADK ... H80			1.2mm	
CODE	Width a mm	Length L mm	kg 1 pc	pcs
ADK 807 12 PG	75	3000	2.37	2
ADK 810 12 PG	100	3000	2.60	2
ADK 812 12 PG	125	3000	2.84	2
ADK 815 12 PG	150	3000	3.08	2
ADK 820 12 PG	200	3000	3.55	2
ADK 822 12 PG	225	3000	3.78	2
ADK 825 12 PG	250	3000	4.02	2
ADK 830 12 PG	300	3000	4.49	2
ADK 840 12 PG	400	3000	5.43	2
ADK 845 12 PG	450	3000	5.90	2
ADK 850 12 PG	500	3000	6.37	2
ADK 860 12 PG	600	3000	7.31	2
			1.5mm	
ADK 807 15 PG	75	3000	2.94	2
ADK 810 15 PG	100	3000	3.23	2
ADK 812 15 PG	125	3000	3.53	2
ADK 815 15 PG	150	3000	3.82	2
ADK 820 15 PG	200	3000	4.41	2
ADK 822 15 PG	225	3000	4.70	2
ADK 825 15 PG	250	3000	5.00	2
ADK 830 15 PG	300	3000	5.59	2
ADK 840 15 PG	400	3000	6.76	2
ADK 845 15 PG	450	3000	7.35	2
ADK 850 15 PG	500	3000	7.94	2
ADK 860 15 PG	600	3000	9.12	2

Seperator

Seperatör - Перегородка

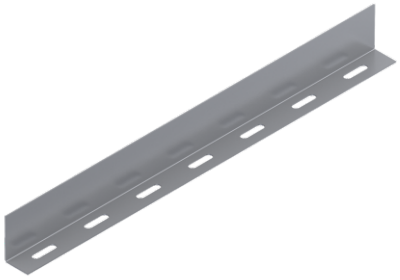

To Install Sepertor use CFS bolts and nuts. (M6 or M8)

Pre - Galvanised

SEP 1 ... H80		1.0mm	
CODE	Length L mm	kg 1m	pcs
SEP 180 10 PG	3000	0.75	1

SEP 1 ... H80		1.5mm	
CODE	Length L mm	kg 1m	pcs
SEP 180 15 PG	3000	1.12	1

ADK H80

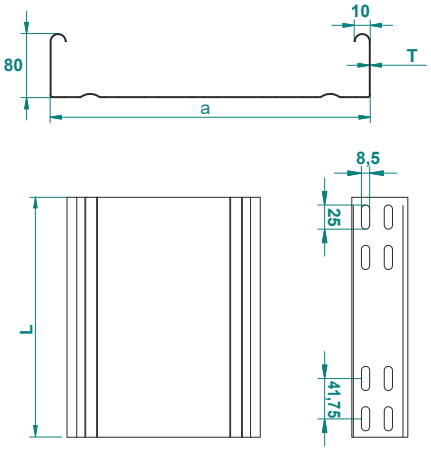

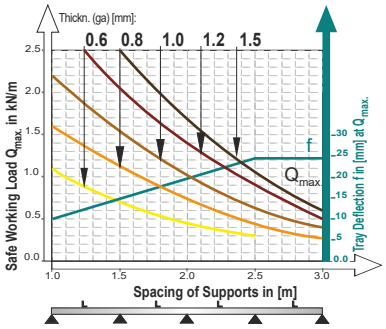

This diagram comply with IEC 61537 with connection to 1/5 of the span and the end span =0,8x the span
Q = max. admissible load (kg/m)
L = support distance (m)
f = Deflection (mm) / Max. deflection = L/100
Safetly co-efficient = 1.5

Width	Usable Cross-Section
50	40 cm²
100	80 cm²
150	120 cm²
200	160 cm²
300	240 cm²
400	320 cm²
500	400 cm²
600	480 cm²

SEP 1 H80

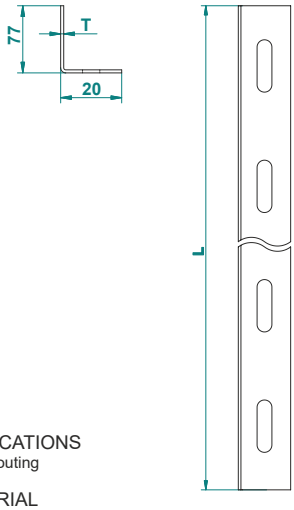

APPLICATIONS
Cable routing

MATERIAL
Steel, strip-galv. acc. to the Sendzimir method to TS-EN 10346:2011 (PG)

Available finishes:
HDG-steel, hot-dip galv. to TS-EN ISO 1461:2011 (HDG)
SS- stainless steel AISI 304L and AISI 316L (SS)
EP- powder coating in a full range of colours (RAL)

Thickn. (ga) [mm]: 0.6 0.8 1.0 1.2 1.5

90° Horizontal Bend of Cable Tray

90° Yatay Kanal Dönüş Elemanı - Угол горизонтальный 90°

Pre - Galvanised

Important!
To install cable tray - bend use Screw Sets CFS M6 or CFS M8

KA90 ... H80		1.0mm	
CODE	Width a=b mm	kg 1 pc	pcs
KA90 807 10 PG	75	0.38	1
KA90 810 10 PG	100	0.55	1
KA90 812 10 PG	125	0.64	1
KA90 815 10 PG	150	0.74	1
KA90 820 10 PG	200	0.97	1
KA90 822 10 PG	225	1.09	1
KA90 825 10 PG	250	1.22	1
		1.2mm	
KA90 830 12 PG	300	1.91	1
KA90 840 12 PG	400	2.72	1
KA90 845 12 PG	450	3.17	1
KA90 850 12 PG	500	3.66	1
KA90 860 12 PG	600	4.75	1

KA90 ... H80		1.5mm	
CODE	Width a=b mm	kg 1 pc	pcs
KA90 807 15 PG	75	0.57	1
KA90 810 15 PG	100	0.82	1
KA90 812 15 PG	125	0.96	1
KA90 815 15 PG	150	1.11	1
KA90 820 15 PG	200	1.45	1
KA90 822 15 PG	225	1.63	1
KA90 825 15 PG	250	1.83	1
KA90 830 15 PG	300	2.39	1
KA90 840 15 PG	400	3.39	1
KA90 845 15 PG	450	3.96	1
KA90 850 15 PG	500	4.58	1
KA90 860 15 PG	600	5.94	1

KA90 H80

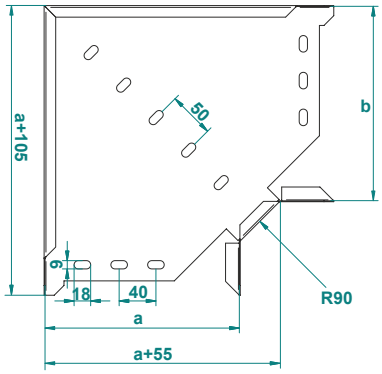

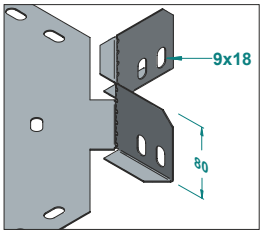

45° Horizontal Bend of Cable Tray

45° Yatay Kanal Dönüş Elemanı - Угол горизонтальный 45°

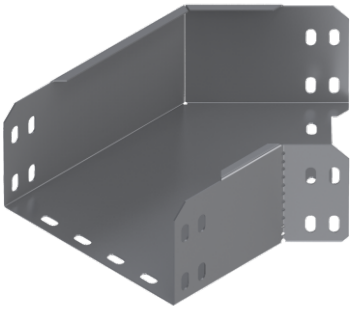

Pre - Galvanised

Important!
To install cable tray - bend use Screw Sets CFS M6 or CFS M8

KA45 ... H80		1.0mm	
CODE	Width a=b mm	kg 1 pc	pcs
KA45 807 10 PG	75	0,41	1
KA45 810 10 PG	100	0,49	1
KA45 812 10 PG	125	0,62	1
KA45 815 10 PG	150	0,72	1
KA45 820 10 PG	200	0,94	1
KA45 822 10 PG	225	1,06	1
KA45 825 10 PG	250	1,19	1
		1.2mm	
KA45 830 12 PG	300	1,76	1
KA45 840 12 PG	400	2,54	1
KA45 845 12 PG	450	2,98	1
KA45 850 12 PG	500	3,46	1
KA45 860 12 PG	600	4,52	1

KA45 ... H80		1.5mm	
CODE	Width a=b mm	kg 1 pc	pcs
KA45 807 15 PG	75	0,61	1
KA45 810 15 PG	100	0,73	1
KA45 812 15 PG	125	0,93	1
KA45 815 15 PG	150	1,08	1
KA45 820 15 PG	200	1,41	1
KA45 822 15 PG	225	1,59	1
KA45 825 15 PG	250	1,78	1
KA45 830 15 PG	300	2,20	1
KA45 840 15 PG	400	3,18	1
KA45 845 15 PG	450	3,73	1
KA45 850 15 PG	500	4,32	1
KA45 860 15 PG	600	5,65	1

KA45 H80

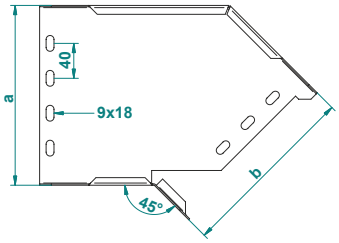

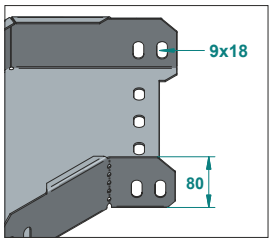

APPLICATIONS
Cable routing

MATERIAL
Steel, strip-galv. acc. to the Sendzimir method to TS-EN 10346:2011 (PG)

Available finishes:
HDG-steel, hot-dip galv. to TS-EN ISO 1461:2011 (HDG)
SS- stainless steel AISI 304L and AISI 316L (SS)
EP- powder coating in a full range of colours (RAL)

Thickn. (ga) [mm]: 0.6 | 0.8 | 1.0 | 1.2 | 1.5

Tee Horizontal Bend of Cable Tray

"T" Yatay Kanal Dönüş Elemanı - Т-отвод горизонтальный

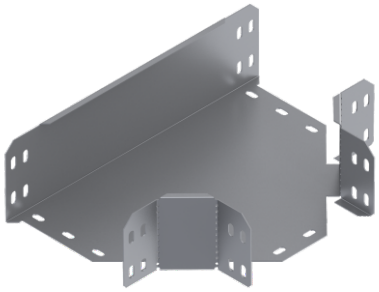

Important!
To install cable tray - bend use Screw Sets CFS M6 or CFS M8

Pre - Galvanised

KAT ... H80		1.0mm	
CODE	Width a=b=c mm	kg 1 pc	pcs
KAT 807 10 PG	75	0,51	1
KAT 810 10 PG	100	0,73	1
KAT 812 10 PG	125	0.84	1
KAT 815 10 PG	150	0.95	1
KAT 820 10 PG	200	1.20	1
KAT 822 10 PG	225	1.34	1
KAT 825 10 PG	250	1.49	1
		1.2mm	
KAT 830 12 PG	300	2.37	1
KAT 840 12 PG	400	3.26	1
KAT 845 12 PG	450	3.76	1
KAT 850 12 PG	500	4.30	1
KAT 860 12 PG	600	5.47	1

KAT ... H80		1.5mm	
CODE	Width a=b=c mm	kg 1 pc	pcs
KAT 807 15 PG	75	0.77	1
KAT 810 15 PG	100	1.09	1
KAT 812 15 PG	125	1.25	1
KAT 815 15 PG	150	1.43	1
KAT 820 15 PG	200	1.81	1
KAT 822 15 PG	225	2.01	1
KAT 825 15 PG	250	2.23	1
KAT 830 15 PG	300	2.96	1
KAT 840 15 PG	400	4.08	1
KAT 845 15 PG	450	4.70	1
KAT 850 15 PG	500	5.37	1
KAT 860 15 PG	600	6.84	1

Cross Bend of Cable Tray

4'lü Bağlantı Elemanı- Крестовина

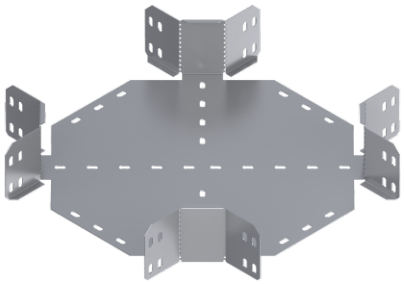

Important!
To install cable tray - bend use Screw Sets CFS M6 or CFS M8

Pre - Galvanised

KAD ... H80		1.0mm	
CODE	Width a=b=c=d mm	kg 1 pc	pcs
KAD 807 10 PG	75	0.68	1
KAD 810 10 PG	100	0.97	1
KAD 812 10 PG	125	1,09	1
KAD 815 10 PG	150	1.22	1
KAD 820 10 PG	200	1.50	1
KAD 822 10 PG	225	1.65	1
KAD 825 10 PG	250	1.81	1
		1.2mm	
KAD 830 12 PG	300	2.94	1
KAD 840 12 PG	400	3.92	1
KAD 845 12 PG	450	4.47	1
KAD 850 12 PG	500	5.04	1
KAD 860 12 PG	600	6.31	1

KAD ... H80		1.5mm	
CODE	Width a=b=c=d mm	kg 1 pc	pcs
KAD 807 15 PG	75	1.02	1
KAD 810 15 PG	100	1.45	1
KAD 812 15 PG	125	1.63	1
KAD 815 15 PG	150	1.83	1
KAD 820 15 PG	200	2.25	1
KAD 822 15 PG	225	2.48	1
KAD 825 15 PG	250	2.72	1
KAD 830 15 PG	300	3.67	1
KAD 840 15 PG	400	4.90	1
KAD 845 15 PG	450	5.58	1
KAD 850 15 PG	500	6.31	1
KAD 860 15 PG	600	7.89	1

KAT H80

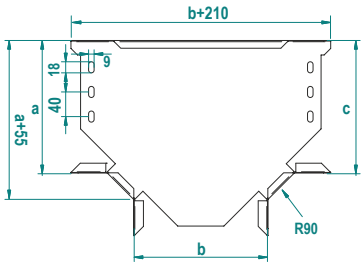

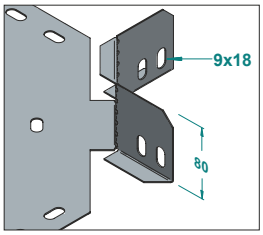

KAD H80

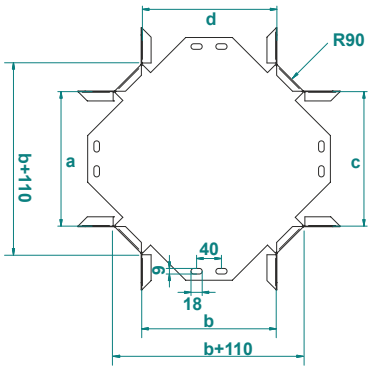

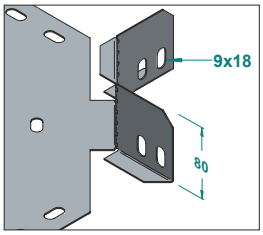

APPLICATIONS
Cable routing

MATERIAL
Steel, strip-galv. acc. to the Sendzimir method to TS-EN 10346:2011 (PG)

Available finishes:
HDG-steel, hot-dip galv. to TS-EN ISO 1461:2011 (HDG)
SS- stainless steel AISI 304L and AISI 316L (SS)
EP- powder coating in a full range of colours (RAL)

Thickn. (ga) [mm]: 0.6 | 0.8 | 1.0 | 1.2 | 1.5

Vertical Outside Bend of Cable Tray (Flexible)

Kanal Dış Bükey - Арка универсальная, внешний изгиб

Important!
To install vertical bend - use 2 pieces of KBE connectors and 4 sets of CFS bolts and nuts (M6 or M8).

Pre - Galvanised

KADB ... H80			1.0mm	
CODE	Width a mm	Length L mm	kg 1 pc	pcs
KADB 807 10 PG	75	600	0.93	1
KADB 810 10 PG	100	600	1.02	1
KADB 812 10 PG	125	600	1.11	1
KADB 815 10 PG	150	600	1.20	1
KADB 820 10 PG	200	600	1.39	1
KADB 822 10 PG	225	600	1.48	1
KADB 825 10 PG	250	600	1.58	1
			1.2mm	
KADB 830 12 PG	300	600	2.11	1
KADB 840 12 PG	400	600	3.05	1
KADB 845 12 PG	450	600	3.32	1
KADB 850 12 PG	500	600	3.59	1
KADB 860 12 PG	600	600	4.12	1

KADB ... H80			1.5mm	
CODE	Width a mm	Length L mm	kg 1 pc	pcs
KADB 807 15 PG	75	600	1.38	1
KADB 810 15 PG	100	600	1.52	1
KADB 812 15 PG	125	600	1.66	1
KADB 815 15 PG	150	600	1.79	1
KADB 820 15 PG	200	600	2.07	1
KADB 822 15 PG	225	600	2.21	1
KADB 825 15 PG	250	600	2.35	1
KADB 830 15 PG	300	600	2.62	1
KADB 840 15 PG	400	600	3.80	1
KADB 845 15 PG	450	600	4.14	1
KADB 850 15 PG	500	600	4.47	1
KADB 860 15 PG	600	600	5.13	1

Vertical Inside Bend of Cable Tray (Flexible)

Kanal İç Bükey- Арка универсальная, внутренний изгиб

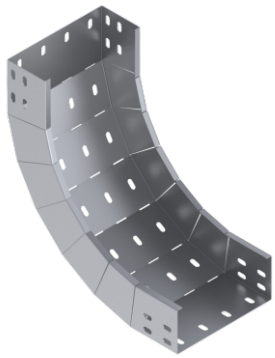

Important!
To install vertical bend - use 2 pieces of KBE connectors and 4 sets of CFS bolts and nuts (M6 or M8).

Pre - Galvanised

KAIB ... H80			1.0mm	
CODE	Width a mm	Length L mm	kg 1 pc	pcs
KAIB 807 10 PG	75	600	0.93	1
KAIB 810 10 PG	100	600	1.02	1
KAIB 812 10 PG	125	600	1.11	1
KAIB 815 10 PG	150	600	1.20	1
KAIB 820 10 PG	200	600	1.39	1
KAIB 822 10 PG	225	600	1.48	1
KAIB 825 10 PG	250	600	1.58	1
			1.2mm	
KAIB 830 12 PG	300	600	2.11	1
KAIB 840 12 PG	400	600	3.05	1
KAIB 845 12 PG	450	600	3.32	1
KAIB 850 12 PG	500	600	3.59	1
KAIB 860 12 PG	600	600	4.12	1

KAIB ... H80			1.5mm	
CODE	Width a mm	Length L mm	kg 1 pc	pcs
KAIB 807 15 PG	75	600	1.38	1
KAIB 810 15 PG	100	600	1.52	1
KAIB 812 15 PG	125	600	1.66	1
KAIB 815 15 PG	150	600	1.79	1
KAIB 820 15 PG	200	600	2.07	1
KAIB 822 15 PG	225	600	2.21	1
KAIB 825 15 PG	250	600	2.35	1
KAIB 830 15 PG	300	600	2.62	1
KAIB 840 15 PG	400	600	3.80	1
KAIB 845 15 PG	450	600	4.14	1
KAIB 850 15 PG	500	600	4.47	1
KAIB 860 15 PG	600	600	5.13	1

KADB H80

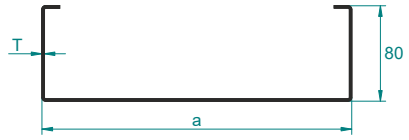

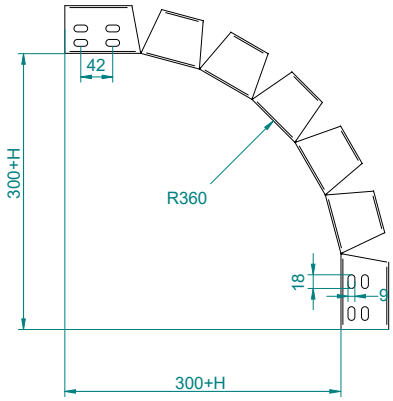

KADB and KAIB are the same items, shipped flat.
To install - Bend manually during application.
in Flat Lenght = 600mm

KAIB H80

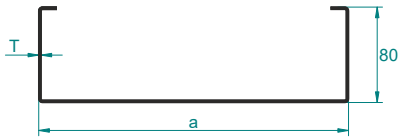

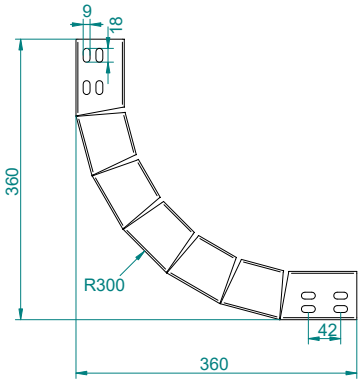

KADB and KAIB are the same items, shipped flat.
To install - Bend manually during application.
in Flat Lenght = 600mm

APPLICATIONS
Cable routing

MATERIAL
Steel, strip-galv. acc. to the Sendzimir method
to TS-EN 10346:2011 (PG)

Available finishes:
HDG-steel, hot-dip galv. to TS-EN ISO 1461:2011 (HDG)
SS- stainless steel AISI 304L and AISI 316L (SS)
EP- powder coating in a full range of colours (RAL)

Thickn. (ga) [mm]: 0.6 | 0.8 | 1.0 | 1.2 | 1.5

Add On 90º Horizontal Corner Bend of Cable Tray

90º Köşe Yatay Kanal Dönüş Eki - Угол 90º врезной

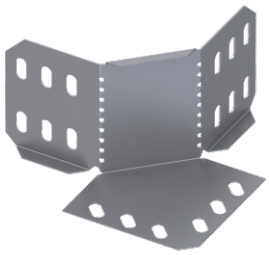

Pre - Galvanised

Important!
To install cable tray - bend use Screw Sets CFS M6 or CFS M8

KA90E ... H80			1.0mm	
CODE	a mm	Radius R mm	kg 1 pc	pcs
KA90E 8 10 PG	55	90	0.18	1
KA90ER1 8 10 PG	90	150	0.27	1
KA90ER2 8 10 PG	180	300	0.54	1

KA90E ... H80			1.5mm	
CODE	a mm	Radius R mm	kg 1 pc	pcs
KA90E 8 15 PG	55	90	0.27	1
KA90ER1 8 15 PG	90	150	0.41	1
KA90ER2 8 15 PG	180	300	0.81	1

Add on tee horizontal bend

"T" yatay kanal dönüş eki - Т-отвод горизонтальный врезной

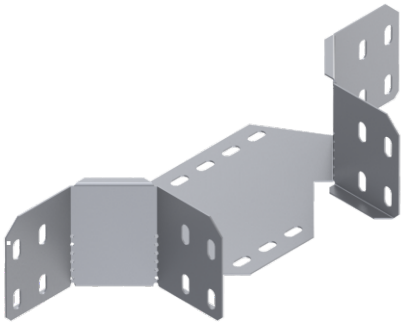

Pre - Galvanised

Important!
To install cable tray - bend use Screw Sets CFS M6 or CFS M8

KATE ... H80			1.0mm	
CODE	Width a mm	Radius R mm	kg 1 pc	pcs
KATE 810 10 PG	100	90	0.44	1
KATE 812 10 PG	125	90	0.46	1
KATE 815 10 PG	150	90	0.49	1
KATE 820 10 PG	200	90	0.55	1
KATE 822 10 PG	225	90	0.58	1
KATE 825 10 PG	250	90	0.60	1
			1.2mm	
CODE	Width a mm	Radius R mm	kg 1pc	pcs
KATE 830 12 PG	300	90	0.79	1
KATE 840 12 PG	400	90	0.93	1
KATE 845 12 PG	450	90	0.99	1
KATE 850 12 PG	500	90	0.98	1
KATE 860 12 PG	600	90	1.19	1

KATER1 ... H80			1.5mm	
CODE	Width a mm	Radius R mm	kg 1 pc	pcs
KATER1 810 15 PG	100	150	1.18	1
KATER1 812 15 PG	125	150	1.24	1
KATER1 815 15 PG	150	150	1.31	1
KATER1 820 15 PG	200	150	1.43	1
KATER1 822 15 PG	225	150	1.50	1
KATER1 825 15 PG	250	150	1.56	1
KATER1 830 15 PG	300	150	1.69	1
KATER1 840 15 PG	400	150	1.95	1
KATER1 845 15 PG	450	150	2.07	1
KATER1 850 15 PG	500	150	2.20	1
KATER1 860 15 PG	600	150	2.46	1

KA90E Mounting

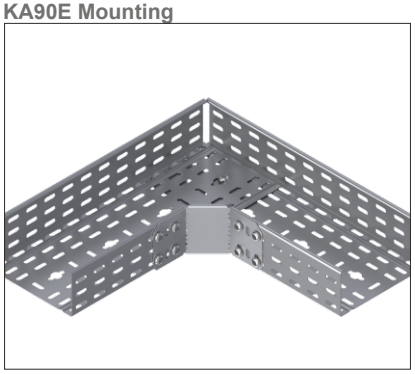

KATE Mounting

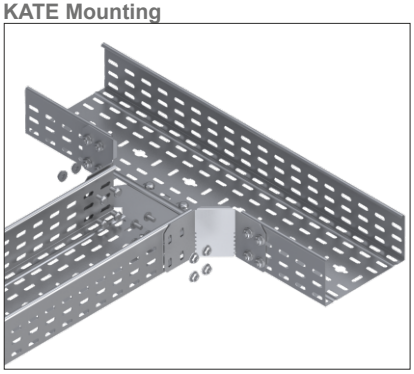

KA90E H80

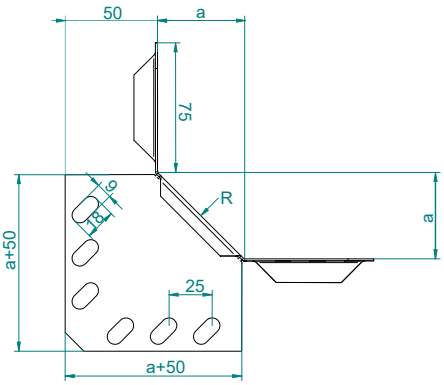

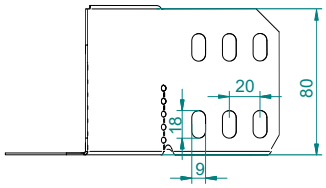

KATE H80

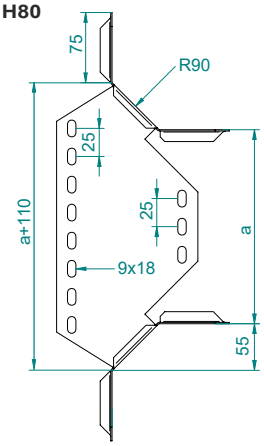

KATER1 H80

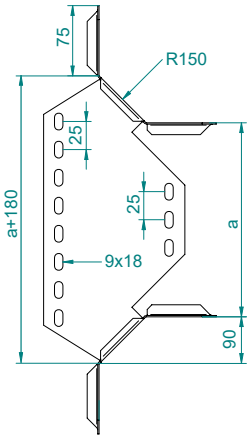

APPLICATIONS
Cable routing

MATERIAL
Steel, strip-galv. acc. to the Sendzimir method to TS-EN 10346:2011 (PG)

Available finishes:
HDG-steel, hot-dip galv. to TS-EN ISO 1461:2011 (HDG)
SS- stainless steel AISI 304L and AISI 316L (SS)
EP- powder coating in a full range of colours (RAL)

Thickn. (ga) [mm]: 0.6 | 0.8 | 1.0 | 1.2 | 1.5

Cable Trays - System of Side Height H80

Adjustable Vertical Connector (2 Pcs)

Dikey Seviye Degistirme Eki (2 Adet) - Шарнирный соединитель для лотка

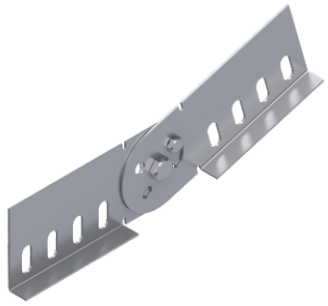

To Install one lenght; use 2 pieces of BDD connector and 10 sets of CFS bolts and nuts. (M6 or M8)

Pre - Galvanised

BDD 2 ... H80		1.2mm	
CODE	Length L mm	kg 1 pc	pcs
BDD 280 12 PG	250	0.22	1

BDD 2 ... H80		1.5mm	
CODE	Length L mm	kg 1 pc	pcs
BDD 280 15 PG	250	0.27	1

Adjustable Horizontal Connector

Yatay Seviye Değiştirme Eki - Угловой соединитель

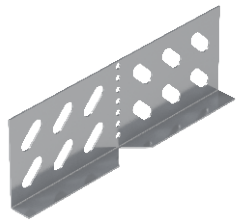

To Install one lenght; use 2 pieces of BYD connector and 8 sets of CFS bolts and nuts. (M6 or M8)

Pre - Galvanised

BYD 2 ... H80		1.2mm	
CODE	Length L mm	kg 1 pc	pcs
BYD 280 12 PG	175	0,12	1

BYD 2 ... H80		1.5mm	
CODE	Length L mm	kg 1 pc	pcs
BYD 280 15 PG	175	0.15	1

Adjustable horizontal connector - Long Type

Yatay seviye değiştirme eki uzun tip - Угловой соединитель - длинный

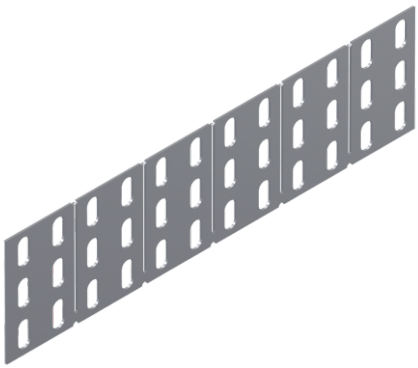

Important!
To install cable tray - connector use Screw Sets CFS M6 or CFS M8

Pre - Galvanised

BYDU 1 ... H80		1.2mm	
CODE	Length L mm	kg 1 pc	pcs
BYDU 180 12 PG	1000	0.29	1

BYDU 1 ... H80		1.5mm	
CODE	Length L mm	kg 1 pc	pcs
BYDU 180 15 PG	1000	0.36	1

BDD 2 H80

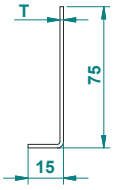

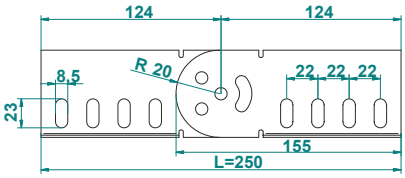

BYD 2 H80

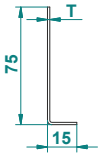

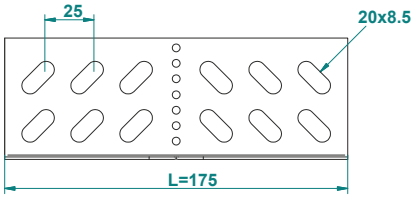

BYDU 1 H60

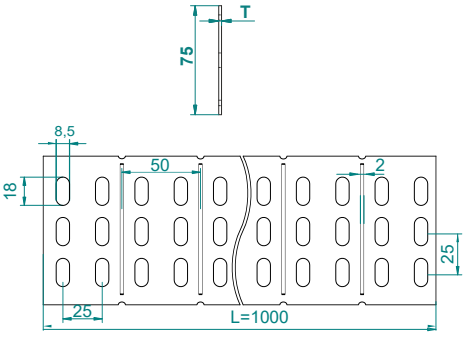

APPLICATIONS
Cable routing

MATERIAL
Steel, strip-galv. acc. to the Sendzimir method to TS-EN 10346:2011 (PG)

Available finishes:
HDG-steel, hot-dip galv. to TS-EN ISO 1461:2011 (HDG)
SS- stainless steel AISI 304L and AISI 316L (SS)
EP- powder coating in a full range of colours (RAL)

Thickn. (ga) [mm]: 0.6 | 0.8 | 1.0 | 1.2 | 1.5

Reducer Connector - Single Type

Reduksiyon Eki (Tek) - Редукционный переходник

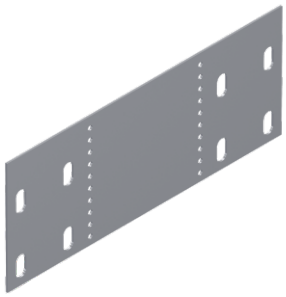

Important!
To install cable tray - reducer use Screw Sets
CFS M6 or CFS M8

Pre - Galvanised

RT ... H80		1.5mm	
CODE	Length L mm	kg 1 pc	pcs
RT 80 25 15 PG	25	0,12	1
RT 80 50 15 PG	50	0,14	1
RT 80 75 15 PG	75	0,16	1
RT 80 100 15 PG	100	0,18	1
RT 80 125 15 PG	125	0,19	1
RT 80 150 15 PG	150	0,21	1
RT 80 175 15 PG	175	0,23	1
RT 80 200 15 PG	200	0,25	1
RT 80 225 15 PG	225	0,26	1
RT 80 250 15 PG	250	0,28	1
RT 80 275 15 PG	275	0,30	1
RT 80 300 15 PG	300	0,32	1

RT ... H80		1.5mm	
CODE	Length L mm	kg 1 pc	pcs
RT 80 325 15 PG	325	0,34	1
RT 80 350 15 PG	350	0,35	1
RT 80 375 15 PG	375	0,37	1
RT 80 400 15 PG	400	0,39	1
RT 80 425 15 PG	425	0,41	1
RT 80 450 15 PG	450	0,42	1
RT 80 475 15 PG	475	0,44	1
RT 80 500 15 PG	500	0,46	1
RT 80 525 15 PG	525	0,48	1
RT 80 550 15 PG	550	0,49	1
RT 80 575 15 PG	575	0,51	1

RT H80

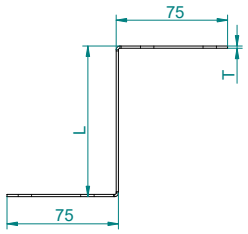

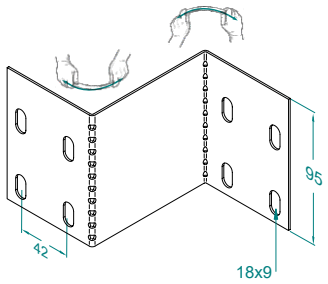

Stop End (Blind End)

Sonlandırma - Заглушка

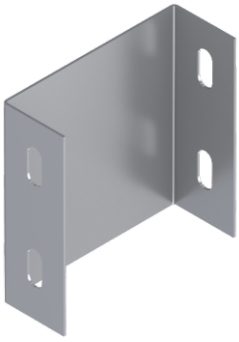

Important!
To install cable tray - stop end use Screw Sets
CFS M6 or CFS M8

Pre - Galvanised

SON ... H80		1.2mm	
CODE	Width a mm	kg 1 pc	pcs
SON 807 12 PG	75	0.11	1
SON 810 12 PG	100	0.12	1
SON 812 12 PG	125	0.14	1
SON 815 12 PG	150	0.15	1
SON 820 12 PG	200	0.18	1
SON 822 12 PG	225	0.19	1
SON 825 12 PG	250	0.21	1
SON 830 12 PG	300	0.24	1
SON 840 12 PG	400	0.29	1
SON 845 12 PG	450	0.32	1
SON 850 12 PG	500	0.35	1
SON 860 12 PG	600	0.41	1

SON ... H80		1.5mm	
CODE	Width a mm	kg 1 pc	pcs
SON 807 15 PG	75	0.14	1
SON 810 15 PG	100	0.16	1
SON 812 15 PG	125	0.17	1
SON 815 15 PG	150	0.19	1
SON 820 15 PG	200	0.23	1
SON 822 15 PG	225	0.24	1
SON 825 15 PG	250	0.26	1
SON 830 15 PG	300	0.30	1
SON 840 15 PG	400	0.37	1
SON 845 15 PG	450	0.40	1
SON 850 15 PG	500	0.44	1
SON 860 15 PG	600	0.51	1

SON H80

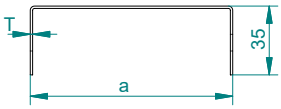

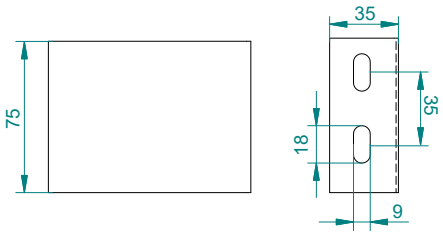

APPLICATIONS
Cable routing

MATERIAL
Steel, strip-galv. acc. to the Sendzimir method
to TS-EN 10346:2011 (PG)

Available finishes:
HDG-steel, hot-dip galv. to TS-EN ISO 1461:2011 (HDG)
SS- stainless steel AISI 304L and AISI 316L (SS)
EP- powder coating in a full range of colours (RAL)

Thickn. (ga) [mm]: 0.6 | 0.8 | 1.0 | 1.2 | 1.5